MONITOR OBSTRUCTION

Vector Frame Monitor Kiosk 02: VF-MK-02-CC-G

Graphic with Monitor Mount
Total graphic area: 51.125”w X 98.375”h
Total finished area: 47.125”w X 94.375”h

Please be sure to include the 2” bleed around the perimeter (note trim & stitch locations on template). DO NOT design any critical elements (text, logos, etc.) within 2” of the edge. Design on this template if you are ordering VF-MK-02-SS-G.

Please include separate design built on the VF-MK-02-NC-G template if you are ordering VF-MK-02-SS-GDBL.

Please include separate design built on the VF-MK-02-CC-G template if you are ordering VF-MK-02-DS-GDBL and artwork will be different on each side.

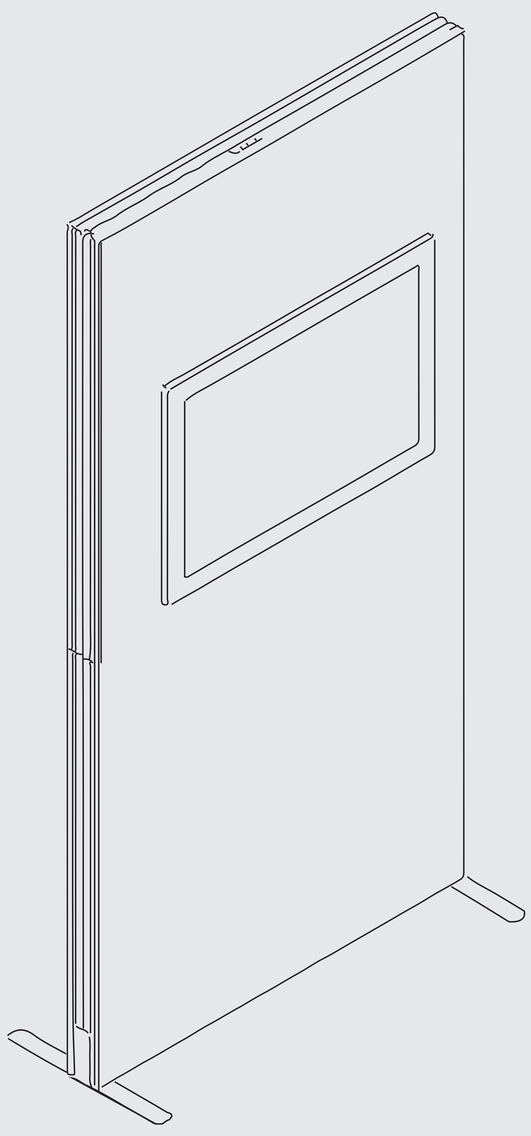

General Art Guidelines:

– CMYK Color Mode

– All Solid Coated Pantone colors should be called out in the art as spot colors

– Embed all images and support files

– Resolution must be 100-120 ppi

– All fonts must be created to outlines

– Do not scale artboard

– Background color/images must bleed to the edge of artboard

– Do not use spot colors from template in your artwork as they will not print

bleed area
trim line
safe zone